Tiandy

TC-C34LQ Spec:LK/I3W/A/E/Y/M/S/H/LPR/8-32mm

4MP Motorized Color Maker LPR Bullet Camera

Pro Series



KEY FEATURES

- Metal housing
- Up to 4MP,2688×1520@30fps
- S+265/H.265/H.264B/H.264M/H.264H/Motion JPEG
- Color:0.002Lux@(F1.6,AGC ON),B/W:0Lux with IR
- IR range up to 60m
- Built-in Mic, Built-in Speaker
- Support microSD/microSDHC/microSDXC card,up to 512GB
- Support smart surveillance
- Support human/vehicle classification
- Operating conditions -35°C~65°C(-31°F~149°F), ⩽95%RH
- DC12V±25%,Max. 14W, PoE:IEEE 802.3at,Max. 15.5W
- IP67

Tiandy Technologies Co.,Ltd Tiandy Overseas Tiandy @tiandyofficial

Tiandy Technologies Co.,Ltd.
Email: sales@tiandy.com Tel: +86-22-58596065
Website: en.tiandy.com Fax: +86-22-58596048

2024.07.29

Tiandy

SPECIFICATIONS

Camera	
Image Sensor	1/1.8"CMOS
Min. Illumination	Color:0.002Lux@(F1.6,AGC ON),B/W:0Lux with IR
Shutter Time	1s~1/100000s
Day&Night	IR-cut filter with auto switch (ICR)
Smart IR	Yes
WDR	120dB
S/N	>43dB
Angle Adjustment	0~360°(P); 0~90°(T); 0~360°(R)
Lens	
Lens Type	Motorized
Focal Length	8~32mm
Aperture Range	F1.3
Aperture Type	Auto(DC-Iris)
Field of View	15.4°~42.8°(H); 8.8°~23.7°(V); 17.6°~49.6°(D)
DORI Distance	Detect:110m~441m Observe:44m~175m Recognize:22m~88m Identify:11m~44m
Illuminator	
IR LEDs	4
IR Distance	Up to 60m
Wavelength	850nm
White LEDs	3
Whitelight Distance	60m
Compression Standard	
Video Compression	S+265/H.265/H.264B/H.264M/H.264H/Motion JPEG
Video Bit Rate	32k~16Mbps
Audio Compression	G.711A/G.711U/ADPCM_D/AAC_LC
Audio Sampling Rate	8kHz/32kHz/48kHz
Image	
Max. Resolution	4MP,2688×1520@30fps
Main Stream	PAL:25fps(2688×1520, 2560×1440, 2304×1296, 1920×1080, 1280×720) NTSC:30fps(2688×1520, 2560×1440, 2304×1296, 1920×1080, 1280×720)
Sub Stream	PAL:25fps(704×576, 704×288, 640×360, 352×288) NTSC:30fps(704×480, 704×240, 640×360, 352×240)
Third Stream	PAL:25fps(1280×720, 704×576, 640×360, 704×288, 352×288) NTSC:30fps(1280×720, 704×480, 640×360, 704×240, 352×240)
BLC	Yes
HLC	Yes
AGC	Yes

Tiandy

White Balance	Auto/Semi-Auto/Manual/Sunshine/Nature Light/Warmlight Lamp/Daylight Lamp/Filament Lamp/Lock White Balance
ROI	8 rectangular static areas
OSD	Overlay of additional characters in 5 regions, 1 line, with a maximum of 127 characters or 42 Chinese characters per region; 16*16/32*32/48*48/64*64/96*96
Picture Overlay	1*200x200 size BMP 24 color bit image overlay
Privacy Mask	4 black static areas
Defog	Yes
Feature	
General Alarm	Motion Detection; Mask Alarm; Alarm Input
Exceptions Alarm	Voltage Alarm; Disk Full; Disk R/W Error; IP Address Conflict; MAC Address Conflict; FTP Server Exception
Linkage Method	Send Email; Trigger Sound; Trigger Warmlight; Trigger Recording; Trigger Capture; Notify Surveillance Center; Alarm Output
Video Analytics	Human/Vehicle Classification; Tripwire; Double Tripwire; Perimeter; Object Abandon; Object Missing; Heatmap; Loitering; Running; People Counting; Crowed Detection; On Duty Detection; Video Abnormal; Audio Abnormal
Rules of Behavior Analyse In 1 Scene	7
Early Warning(EW)	Yes
Network	
ANR	Yes
Protocols	HTTP; HTTPS; TCP/IP; UDP; UPnP; ICMP; IGMP; SNMP v1\v2\v3; DHCP; DNS; DDNS; Easy DDNS; NTP; SMTP; TLS v1.2; SSL; 802.1X; QoS; IPv4; IPv6; PPPoE; SSH; Unicast; Multicast; RTCP; ARP; SRTP; FTP; SFTP
System Compatibility	ONVIF(Profile S/T/G/M) ; SDK; CGI; Milestone; RTSP; RTMP
Remote Connection	⩽7
Client	Easy7 VMS
Moblie Client	EasyLive Plus
Web	IE10+; Firefox52+; Edge89+; Safari11+; Chrome57+
Interface	
Communication Interface	1*RJ-45 (10/100 Base-T)
Audio I/O	1; 1
Alarm I/O	2-ch,TTL inputs,3mA,3.3VDC; 1-ch,relay output,1A,24VDC
Built-in Mic	Yes
Built-in Speaker	Yes
Reset Button	Yes
On-board Storage	Support microSD/microSDHC/microSDXC card,up to 512GB
RTC	Yes
Additional Interfaces	RS-485
General	

Web Client Language	19 languages Simple Chinese/Traditional Chinese/English/Spanish/Korean/Italian/Turkish/Russian/Thai/French/ Polish/Dutch/Hebrew/Arabic/Vietnamese/German/Ukrainian/Portuguese/Albanian
Operating Temperature	-35°C~65°C(-31°F~149°F)
Operating Humidity	⩽95%RH
Storage Temperature	-35°C~65°C(-31°F~149°F)
Storage Humidity	10%~95%RH(non-condensing)
Power Supply	DC12V±25%,Max. 14W; PoE:IEEE 802.3at,Max. 15.5W
Protection	Surge4000V; ESD6000V; IP67
Boundary Dimensions	330(L)114(W)107(H)mm
Package Dimensions	360(L)150(W)170(H)mm
GrossWeight	1.86kg

DIMENSIONS (Unit: mm)

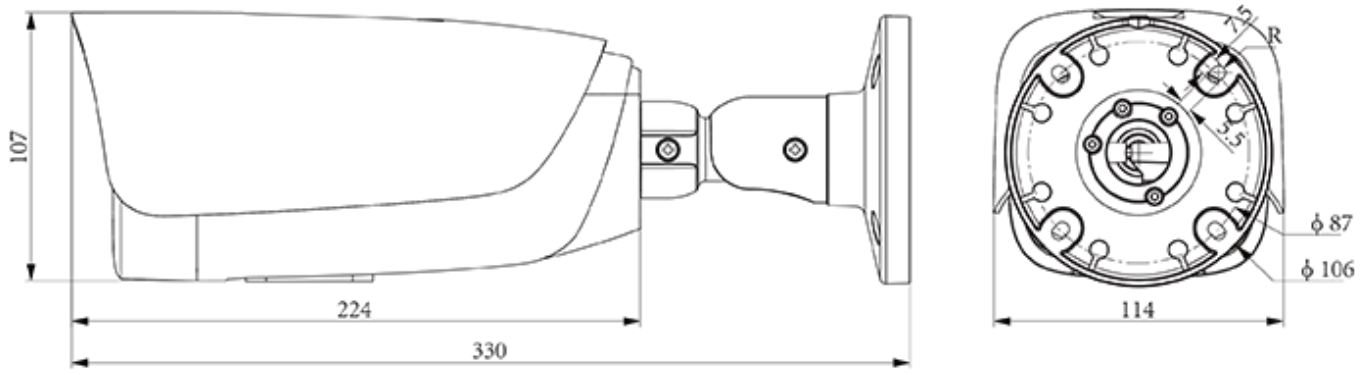

Tiandy

Assembly diagram of Junction Box



A22



A35_V5.0



A36_V5.0